Hallicrafters FPM 300 MKII Restoration Notes

W7CPA
February 5, 2014 Update, X-LOCK Changes

Since I was fortunate to acquire a working, late model MKII version from a fine Yahoo Group Antique SSB Roundtable chap, most of the factory modifications were already included like end of life component changes, band switches, AGC, hum etc. (see Appendix A). I found a NOS Cinch Jones 18 pin plug on eBay so I could build a 12VDC cable.

Figure 1 - FPM 300 MKII Front View

Figure 2 - Bottom View After Changes

The current eHam reviews of this transceiver suggest a real dog's breakfast product. I remember my neighbor in Chicago in 1978 sold his Kenwood twins for an early model and he told me it was the worst decision of his life. A Yahoo Hallicrafters Group post by a service technician says that there was a 65% return rate and many boards outsourced in the Chicago area had major solder flow/defect problems. Why am I doing this again? I definitely need to visit the Vintage Radio Anonymous (VRA) group after this project.

WD0GOF: "The final production of the FPM-300 MKII was done in Kansas City, Mo which ended in 1978 at the Wilcox facility. Northrop/Wilcox sold what was left of Hallicrafters assets in 1979 to a group in Texas. The second generation MKII was a much better rig. In order to keep cost down the MKII used up the existing stock of 9MHZ and VFO boards that were built in the old Hallicrafters facility. Low serial # MKII's had a lot of intermittent ground and solder connections."

My manual looks like a final version with Northrop-Wilcox labels. I see they have fixed some major errors like a missing jumper on the AC plug so this final manual would be a good one to acquire if you are keeping your FPM 300 beastie. It was last revised August 15, 1974 by Wilcox.

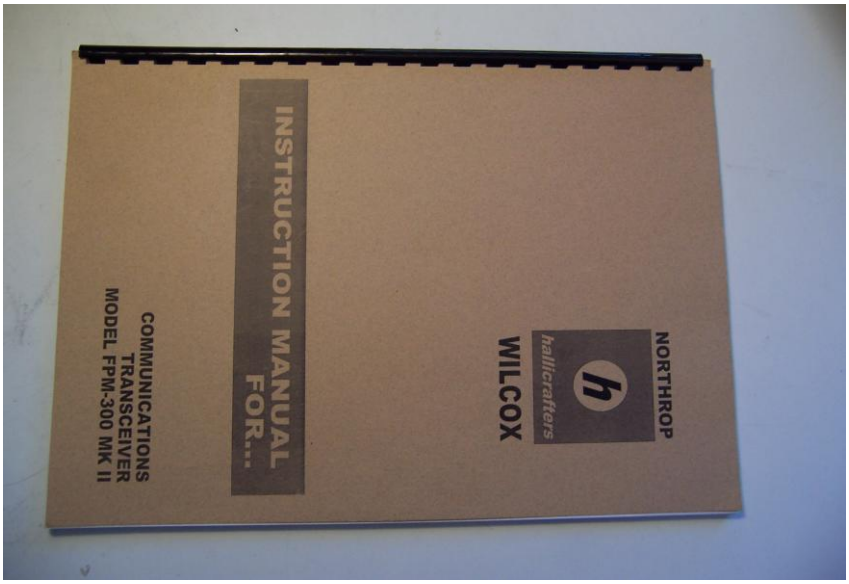

The cover will not open very far with the optional cooling fan installed so it must be removed to install the X-LOCK unit unless you have itty bitty hands and lots of patience.

The Major Flaws

1. VFO drift, really bad, never stabilizes, the major dog's breakfast issue reported in most reviews
2. Does not transmit and receive on the same frequency (40-50Hz delta), the other dog's breakfast bit – this might be my unit only after contacting some other FPM 300 owners
3. 12.6 VDC supply has zero regulation and swings 0.8VDC just transitioning to XMT with no power out. Only the shunt zener diode regulators on VFO OSC, HET OSC and USB/LSB OSC provide what regulation there is.
4. The band switch toothed belt, rots and dies
5. CW offset (1700) is just like the KWM-2 making the rig quite useless for CW since no RIT is provided
6. The factory cooling fan is truly annoying loud and blocks opening the lid beyond 50%.
7. The dial backlighting is poor, single bulb, not diffused, off center blob of light. W4OP deployed a LED array to make it perfect. Someone had added a 37 ohm resistor to dim the bulbs. I put this back to original since I didn't care about heat with the X-LOCK deployed.

What I Decided to Fix/Change

1. Added modern 12.65 VDC supply regulation with a LM2941 LDO part with more filer capacitance
2. Find annoying T/R transition 40-50Hz VFO delta cause
3. Installed an X-LOCK unit to keep the VFO within 10Hz from cold to 24 hours
4. Changed 12BY7A and 6KD6 final
5. Bought a new Gates toothed band switch belt on eBay and installed it since someone had shimmed an incorrect belt with electrical tape and installed it tooth side out for some incredibly stupid reason, Deoxit made goo of the electrical tape shims. What a mess, do it right or don't do it at all people!
6. VFO knobs white stripes very faded, not as nice and the rest of the radio, marks not engraved properly so white paint sticks are not going to work.
7. Replaced power supply plate and screen filter caps. The screen cap was a paper dual 50uf 350 vdc that measured ok but changed over time.

FIX Attempt Details

12.6 VDC Bus Regulation Experiment

The original unregulated design relies on zener shunt regulators on the boards it feeds.

This mod is not necessary if you don't mind 60's era stability and your unit is working to your satisfaction.

Original Unregulated Design

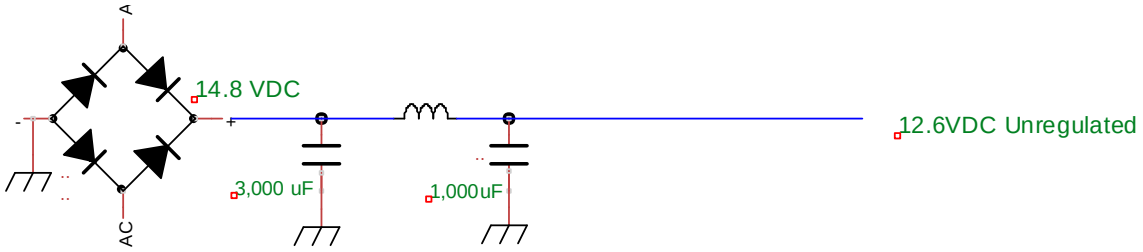

I had some LM317s on hand so I gave them a go.

First Pass at a Regulated Design Using Older LM317 Technology

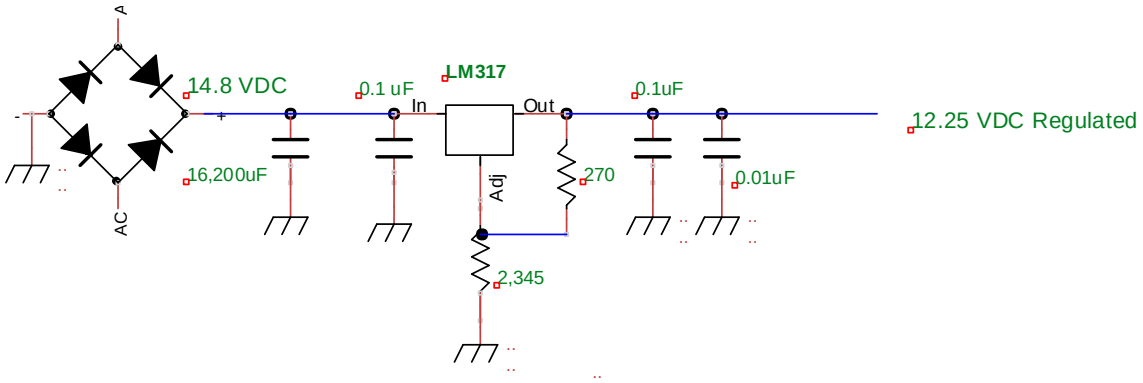

This first design did not allow setting regulator output to the required 12.6 VDC even when I removed the choke. I found that 12.25VDC was the best possible regulation point. A more modern "low dropout" (LDO) design was explored next.

This design yielded good regulation with a small 0.01VDC output drop with a huge 0.8 VDC input swing when transitioned to transmit TUNE – OK but we can do better.

Final Design Using the Improved TI LM2941 LDO Regulator

The LM2941 (Mouser PN= 926-LM2941CT/NOPB) has a highly desirable 500mv delta requirement vs. LM317's 2.8 volt so the desired 12.6 VDC output was possible with outstanding regulation. The TI LM2941 was recommended by K7JEB. I used a 10k and an 82k in parallel to get close to 8900 for R2. R1 was 1k per the datasheet. I could not measure the receive/transmit voltage delta in TUNE at full power with my Fluke 179 so the LM2941 is clearly a better solution.

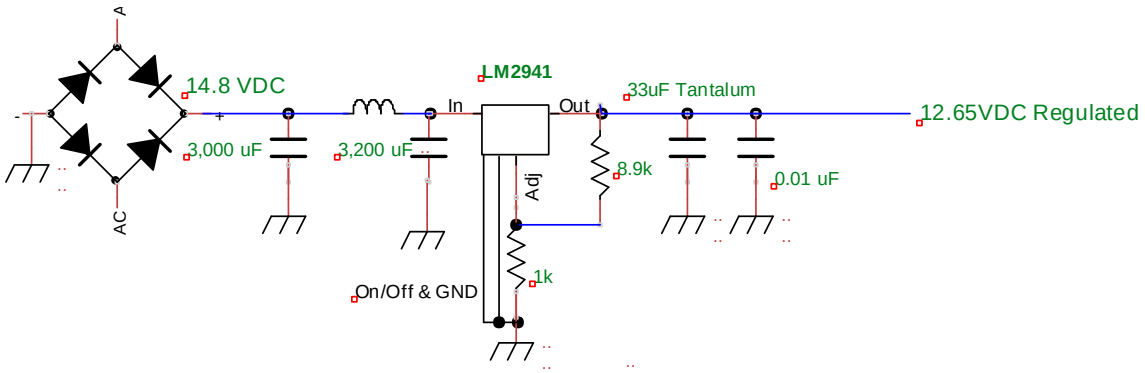

One could build a tasteful little board but I just soldered the regulator to the existing terminal strip (center right area in Figure 2) and made the changes. There is plenty of room for the changes and no heat sink is required given the low current requirements of the FET circuits it's feeding. If you have a small heat sink, I would bolt it to the LM2941 lug to improve long term drift if you don't install the X-LOCK. See the data sheet for output voltage vs. temp plot – worth doing.

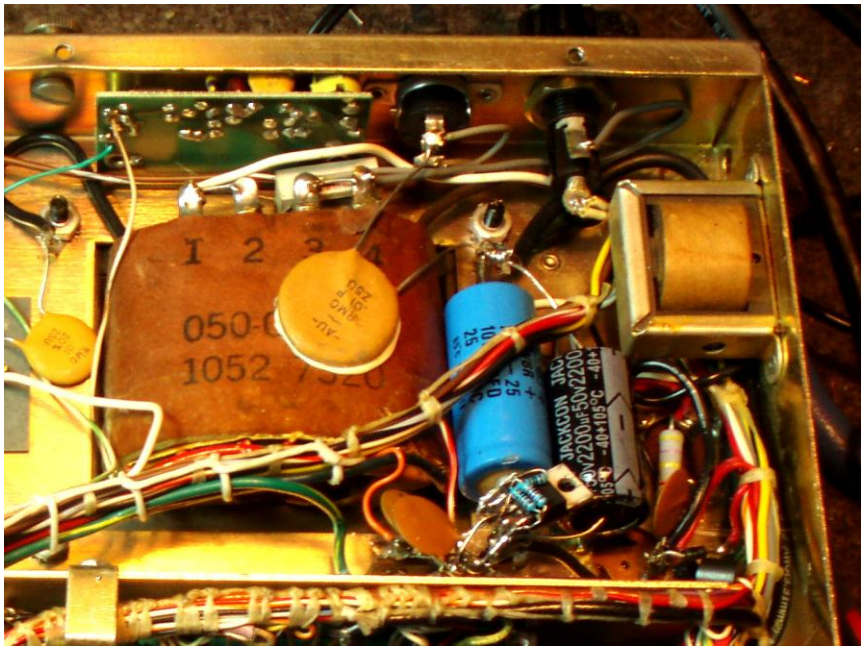

Figure 3 – Regulator & Caps Added on Terminal Strip

Band Switch Belt

I sprayed some DeOxit on the goofy made-from-circuit-boards rotary switches I have read about while troubleshooting the T/R frequency delta problem. I then discovered the old belt was installed improperly (toothed area on hubs was filled with electrical tape - huh?) causing some bands to stop working. Front panel removal is required to even see the belt.

The Figure 3 is the improper install that came with the rig. Figure 4 is the correct install with the correct belt. The “tensioner” is installed but not used on the new belt. It‘s just right without it. To install just get the rotary switches in the 80 meter position (full CW) and push both toothed hubs on mit belt at the same time – easy! There are no set screws on the hubs.

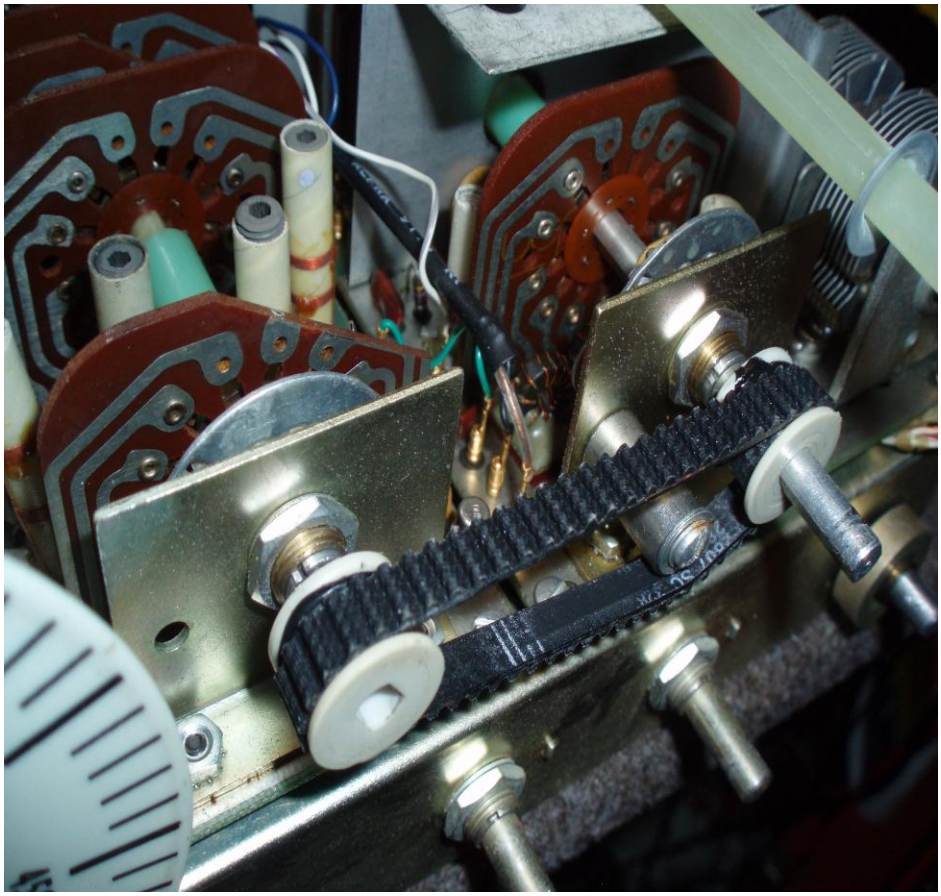

Figure 4 - Goofy Belt Install

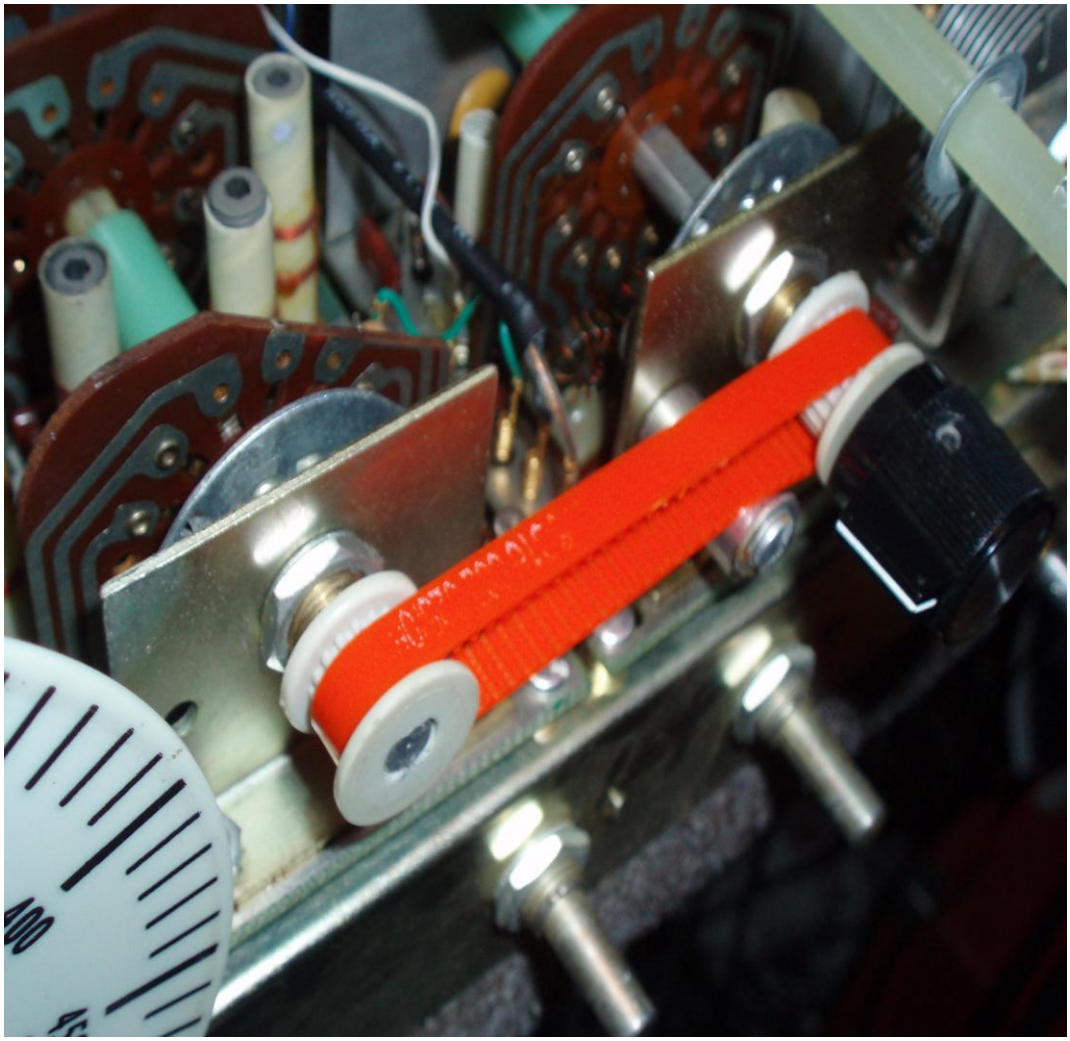

Figure 5 - Correct Belt Install

CB Exorcism

Two of the four 10 meter HET OSC crystals were CB-land frequencies. I replaced with factory values from International. The 15 meter HET OSC died (I suspect a cold air blast might have broken a wire inside) so I ordered many new crystals from International Crystal (thank goodness Sara still has all the FPM 300 requirements to get the physical package and overtone stuff right – see appendix B). 4 of the crystals are though hole solder types and 3 are plug in types. It sure would have been nice to have sockets on all of them. I thought of changing but hacking the board up didn't seem worth such a major effort.

Transmit/Receive VFO Frequency Delta Mystery Meat

After adding near perfect regulation, the stinking R/T delta was still not acceptable. Why? I had removed 100% of any RF hair and provided excellent regulation in front of the zener shut regulators on each oscillator. The damn thing mocks me! W4OP and K6ZSR say they measure no T/R delta so this looks like my rig only.

My goal was 10Hz or less. I took the following R/T frequency delta measurements with a scope and counter:

VFO OSC Buffer	-40Hz, annoying
Heterodyne OSC	0Hz, perfect
SSB Carrier OSC	0 Hz, perfect

So, the VFO is the sole culprit on that board. The VFO OSC zener D402 measured a rock solid, RF free, 9.23 VDC so some other madness is afoot like loading, grounding? The R/T delta was the same whether full TUNE output or zero output.

First off, including a high current audio stage on the same board as the VFO, 1st mixer, HET OSC and Carrier OSC is a really dull idea! The top side ground plane has to carry the audio stage higher current. Also, relying 100% on board mounting screws for grounding seems a little dull as well. With this in mind, I plowed ahead hoping to stumble into the real culprit.

I followed many rat holes and red herrings that I won't list here.

Conclusions

1. First make the VFO reasonably stable in preparation for the X-LOCK install. If you can push down on the board with a plastic stick and make the VFO signal go away or change amplitude, you have bad CHI-TOWN flow solder jobs. I wicked and re-soldered all pads that looked like round blobs vs. nice flows. Now the only problem was drift and the mysterious T/R 40Hz delta.

   The only T/R change on the board is the removal of a relay switched 12.6 VDC voltage on transmit. This mutes the speaker output by biasing the audio power transistors. Additionally, the 8 ohm speaker resistance is used for additional output transistor biasing – weird. You could never run this speaker or headphones through a coupling capacitor!

   The T/R delta is only visible if the 12.6VDC switched input changes -AND- the speaker is connected. Switching the 12.6VDC sans speaker does not cause the T/R delta. This is certainly starting to smell like a grounding issue of some kind.

2. After way too many hours, I finally traced the T/R delta to a 0.01uf bypass cap on the back of the headphone jack. I removed it and now have ZERO T/R delta! This makes no sense but I am going to defer to smarter folks than I on this one. Too many hours have been wasted so far. A known good cap causes the same problem. A smaller 0.001uf cap behaves the same. I think it all gets back to having the audio amp on the VFO board and some weird current flow/loop situation on the top foil. I gave up figuring out why.

3. Running a fat ground wire from the VFO ground plane near the audio power transistors to the bottom of the unit where the DC supply grounds to the chassis improves stability and I believe is worth doing.

X-LOCK

The X-LOCK frequency stabilizer is the world's finest, period. I have used it multiple times with excellent results.

http://www.cumbriadesigns.co.uk/x-lock.htm

This compact microprocessor design brings crystal referenced stability to free running VFOs. Accepting an RF input of a few hundred mV over a frequency range of a few 10s of kHz to over 50MHz, the X-Lock continuously measures the host VFO's frequency. By comparing consecutive measurement results the X-Lock computes a variable correction voltage which when applied to a compensation circuit within the VFO, corrects drift.

I installed the X-LOCK board on top of the VFO variable capacitor using heavy duty 3M Velco (from Radio Shack) strips with a little bit silicon adhesive for good measure. If you remove the lid, this install can be done without removing the PC board. A handy ground point is on the side of the VFO end point calibration capacitor where a solder pad exists.

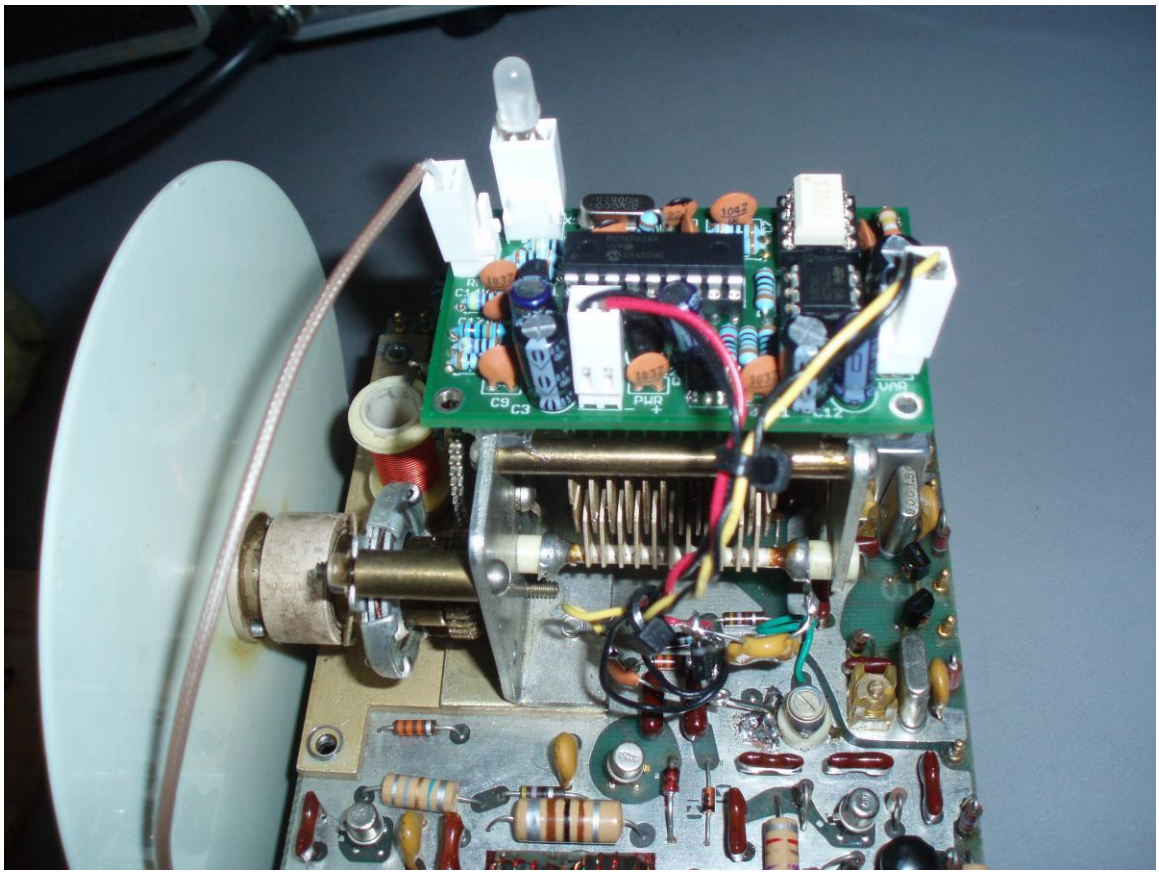

Figure 6 - X-LOCK Board Installed

Installation Notes

1. I connected the DC power leads to the resistor junction for R403 and 2 other resistors and the ground plane for regulated 12.6 VDC.
2. I connected the RF sample input to the VFO Buffer output using a mil-spec mini coax to a handy L403 lead nearest the board edge. I connected the shield only at the X-LOCK RF input connector.
3. I connected the varactor control network directly to the VFO variable capacitor using the supplied 22pf cap. The 68pf cap the X-LOCK comes with is too much capacitance. With 22pf, the DC control voltage ranges from 2 VDC to 4 VDC dead cold to hot so 22pf looks optimum after all, always in range, no warble etc. My initial experiments with 5pf and 10pf were bogus since the cover was open.
4. I programmed the lock time to 4 seconds to give time for fine tuning with the old school VFO before it locks down.
5. I realigned the VFO L and C adjustments for best end-to-end linearity on the dial markings. This turned out surprisingly well.
6. One could mount the X-LOCK status LED directly behind the dial so it would show through the white plastic – another day. As it is, I can see the LED through the lid crack.

The X-LOCK requires a high quality, stable waveform and less than 40Hz per second drift before it does its magic. It turns out that a good test of the VFO quality is to connect the X-LOCK with RF sample input only. If the LED never turns green, you might also have solder flow problems. Figure 5 shows the final X-LOCK install on top of the VFO variable capacitor.

Tuning Knob Marks

The white marks on my tuning knob are not engraved deeply enough for normal white paint stick application. This failed. Maybe there is a way to apply latex paint and buff it off. I give up for now. All attempts were fugly. I was able to spin the aluminum insert on the drill press with super fine sand paper carefully moved from the center out with good results.

6KD6 Final Tube Deaths

I experienced two plate-to-screen short deaths on the horizontally mounted final. Fortunately the 4 amp fuse protected all properly – be advised. I bought 3 eBay 6KD6 wonders. The Sylvania and RCA measured >100 on my Dan Nelson calibrated and Compactron adapted TV-7. They both put out >100 watts PEP on voice peaks. The Realistic “lifetime warranty” tube I bought from the worst eBay seller (desireme1979) I have ever run into is now in my trash can. It measured 32 on the TV-7 and output 5 watts – total junk “tests high” my arse.

These 6KD6 sweep tubes seem to have highly variable performance. If your output is low, try another one. The power out tracks the TV-7 mutual conductance meter pretty well. Since they we used in CB amplifiers, they are now very scarce and pricey ($30-$80!).

CONCLUSIONS

1. First of all, make sure you have a 4 amp fuse installed before you do anything. I had 2 6KD6 tubes short during the restoration fun and the 4 amp fuse protected properly.
2. Don't add the 12.6 VDC regulation if 1960s stability is your cup of tea and the radio is playing to your satisfaction/expectations. Apparently some units stabilized, most never did. A good calibration and the addition of the X-LOCK should be adequate.
3. If you have ugly VFO signals at the buffer stage, erratic levels and/or the T/R delta, you might have bad solder flows, see above.
4. The X-LOCK is always worth doing – rock stable forever as long as the VFO output is stable except for drift.
5. **Be very, very careful** to plug in the 18 pin Cinch-Jones power connector correctly. If you get it one-off vertically, it will test your outlet strip breaker with mucho gusto.
6. Make sure to do a careful alignment with good test equipment if available.
7. The PC boards are high quality! In all my soldering and testing no pads came off.
8. Use DeOXIT on all VFO board mounting screws since there is no ground wire connection to the board – mounting screws only.
9. The SSB carrier null was not up to spec until I sprayed the pot with DeOxit Fader Lube to get the sweet spot back and carefully re-aligned – very touchy.
10. The higher AC mains voltages today increase the unregulated 13.6VDC bus voltage to close to 15VDC. I added a 1N4007 in series on the bridge output to drop the voltage a bit. Now the volume control goes all the way off and the original panel bulbs look right.
11. This is a pretty decent geezer SSB radio when all problems are fixed. The Shure 44D microphone is optimal. The receiver sounds nice even with the small internal speaker.

Appendix A

MODS to bring up to MKII level allegedly from a Hallicrafters Engineer.

1. ALC
On the bottom of pre-selector board add parallel resistors to R518 and R516. Shunt R518 with a 8.2K ¼ watt and R516 with a 22K ¼ watt.

2. HUM
a. Make up a shield between the VFO and PS boards. Cement a piece of aluminum foil to underside of fiber spacer. Make aluminum to cover just inside screw holes. Do not attempt to ground the foil, it is just a static shield to isolate the switching transistors from the audio circuits.
b. Solder in on back of VFO board a 15 pf (disc or mica) between the base of Q407 and the junction of R442 and R441. Trace board wiring and use spot closest to Q407.
c. Change C437 from 0.1 to .01 mfd.
d. Open up on end of C432 and put 4.7K ¼ watt resistor in series. (This is optional, I don't always do it).

3. INTERMITTANT BAND SWITCHES
I solder in short #24 bare wire jumpers on the bottom of the preselector board to join the front and read lands of the switch wafers. This is tricky so be careful or you can mess up the works. (14 jumpers on preselector board)
The same can be done on VFO board switches, but these do not usually cause trouble.

4. AGC
A faster time constant can be obtained by shunting R511 with 10K ¼ watt. The same applies to R204. This seems to smooth out the audio due to better AGC attack., ie., less overload to the detector.

5. MISC
Locate nuts on spade lugs used to attach PA cage to chassis. Invariably these are loose and should be tightened. If dial drags on panel, bend back chassis lip or add shims under top edge of spacers. If VFO is jumpy, clean all wipers on drive and capacitors. In addition, clean gear teeth with some cleaner. I use a TV combination cleaner/lube called "Blue Stuff" by Tech Spray.

6. ADDENDUM to 2A.
In 2A it is recommended that the aluminum foil be covered with a piece of card material cemented in place. The use of Glass tape (3M) can also be used to insulate the file.
The engineer closes his letter with these comments, *"These little rigs can really do a fine job when set up properly. Very few ever got out of the factory quite right."*

Appendix B

The full compliment of heterodyne crystals from IRC follows:

INTERNATIONAL CRYSTAL MANUFACTURING CO. INC.
PO Box 1768
Oklahoma City, OK 73102-2404
Phone: 405.236.3741

OPS Frequency	Catalog #	Description	FX MHz	Price
80 (3450-4050)	No HET Used			
40 (6950-7550)	210550	HALL FPM-300 HET OSC HC49U	21.500	$23.25
20 (13850-14550)	210550	HALL FPM-300 HET OSC HC49U	28.500	$23.25
15 (20950-21550)	210550	HALL FPM-300 HET OSC HC49U	35.500	$23.25
10 (27950-28550)	210551	HALL FPM-300 HET OSC HC-50/U	42.500	$23.25
10 (28450-29050)	210550	HALL FPM-300 HET OSC HC49U	43.000	$23.25
10 (28950-29550)	210551	HALL FPM-300 HET OSC HC-50/U	43.500	$23.25
10 (29450-30050)	210551	HALL FPM-300 HET OSC HC-50/U	44.000	$23.25

Shipping was $9.50

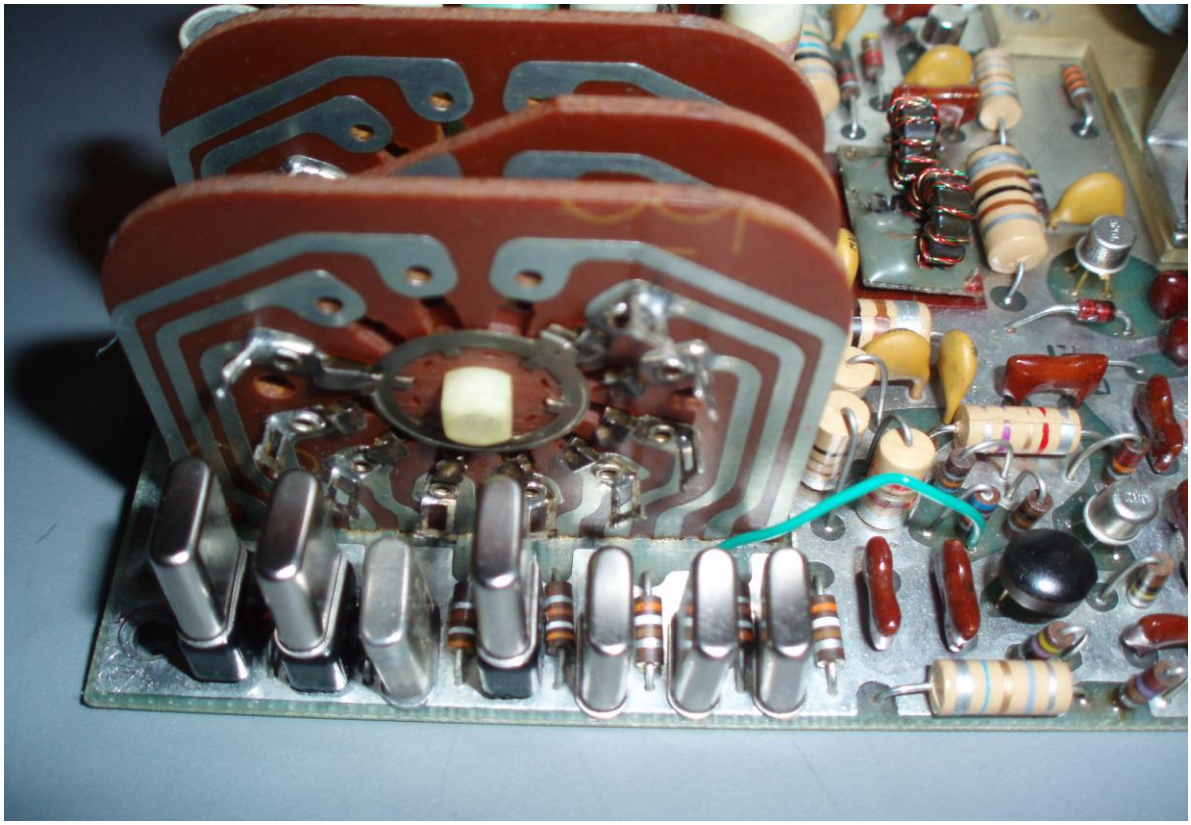

Figure 7 - Full HET OSC Crystals Installed